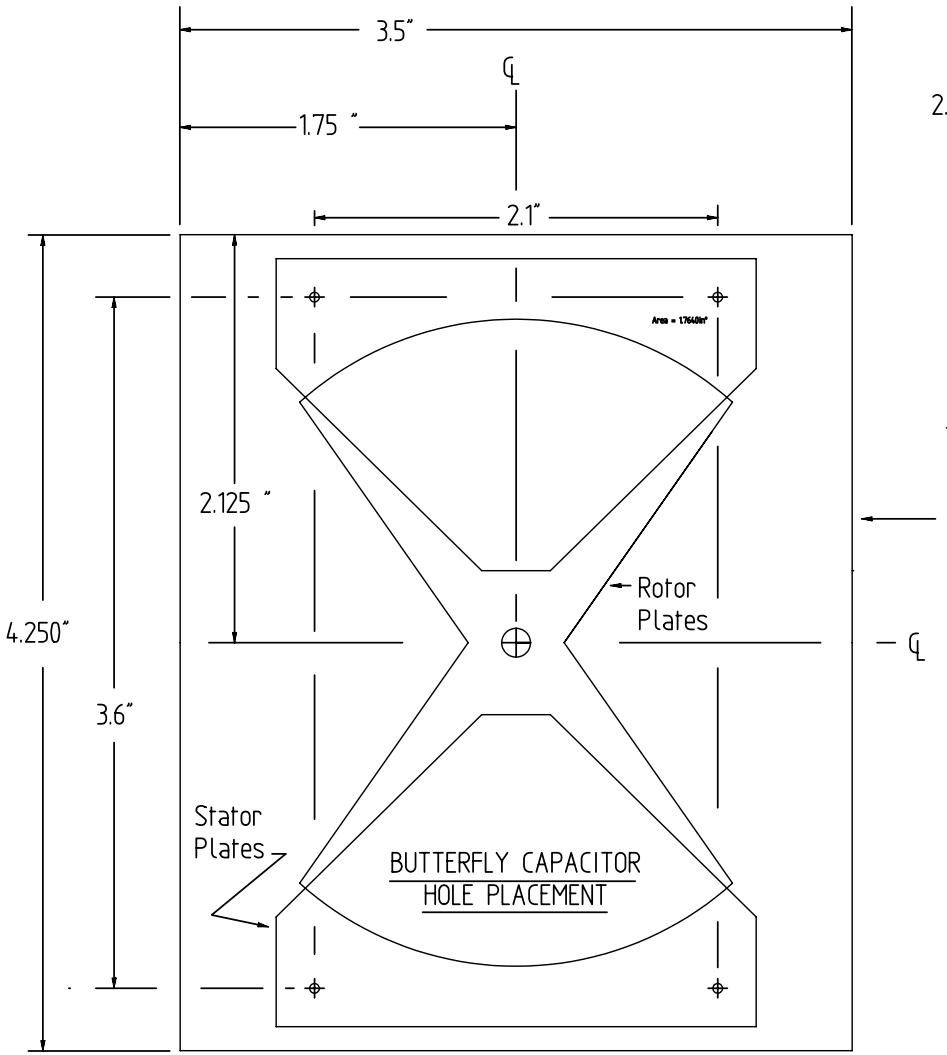

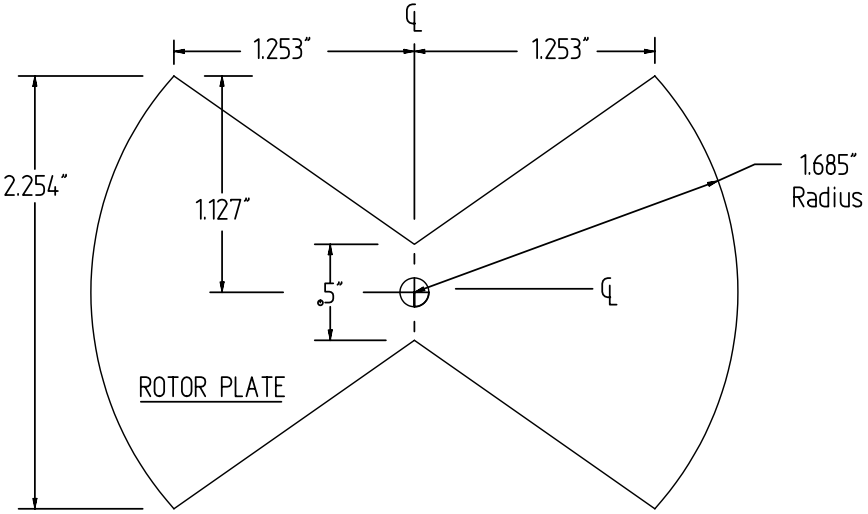

Frame Plates (2 each)

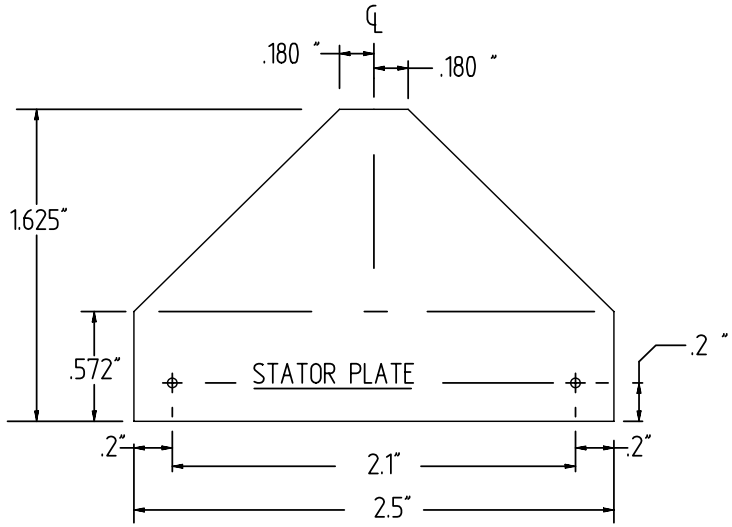

Notes:

(1) Rotor and Stator plates cut from .025" Sheet Aluminum.
(2) The Capacitor Frame plates made from 1/4" Clear Lexan.
(3) All Dimensions are in Inches

Courtesy of
C. Dore' - KD5UDB
Drawn Mar 2005